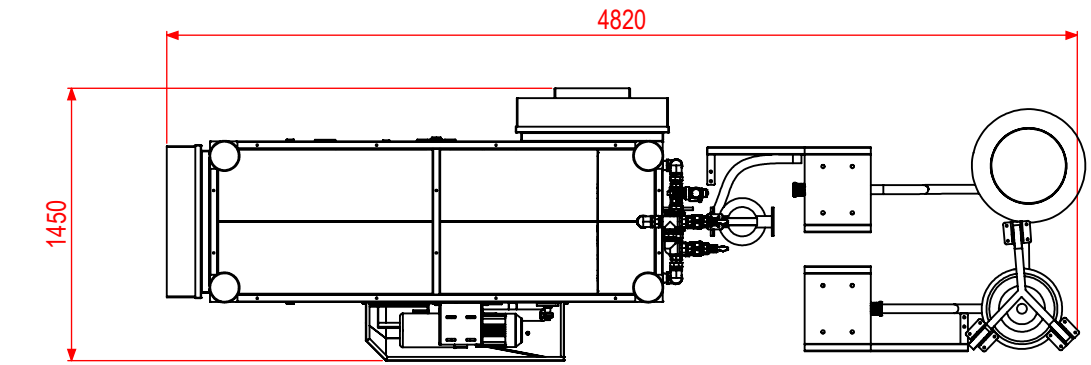
4820
1450

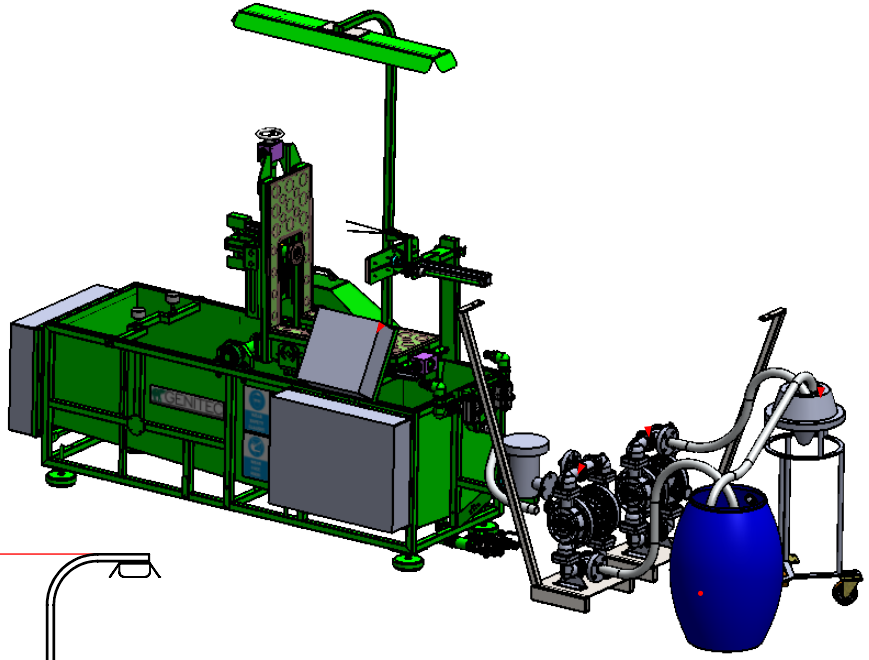

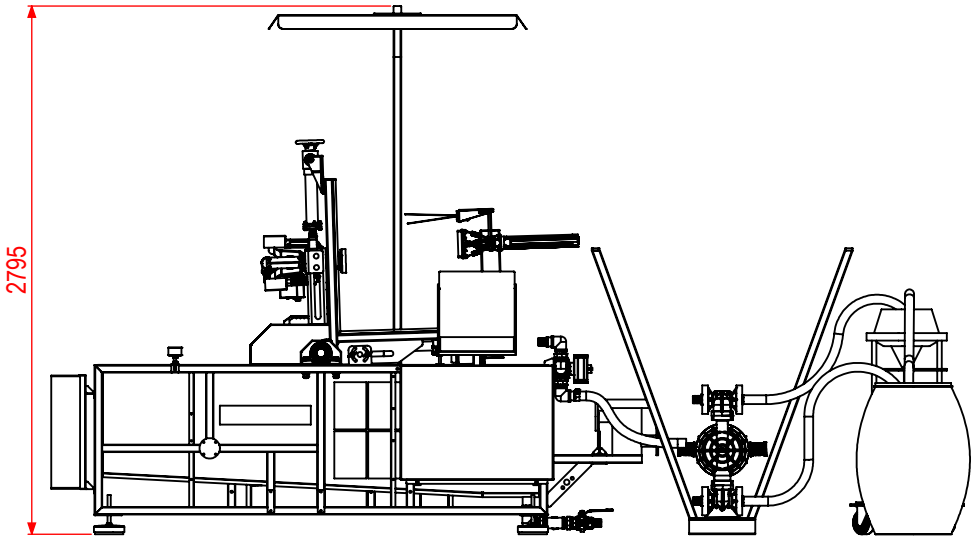
2795

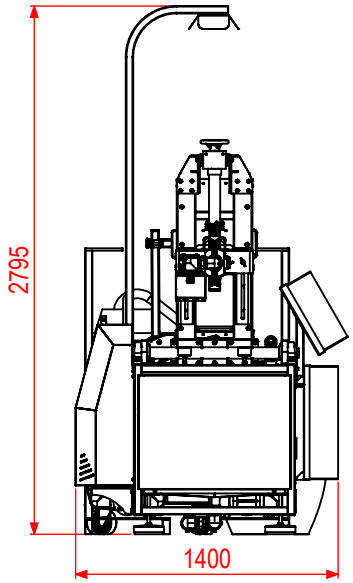
2795
1400